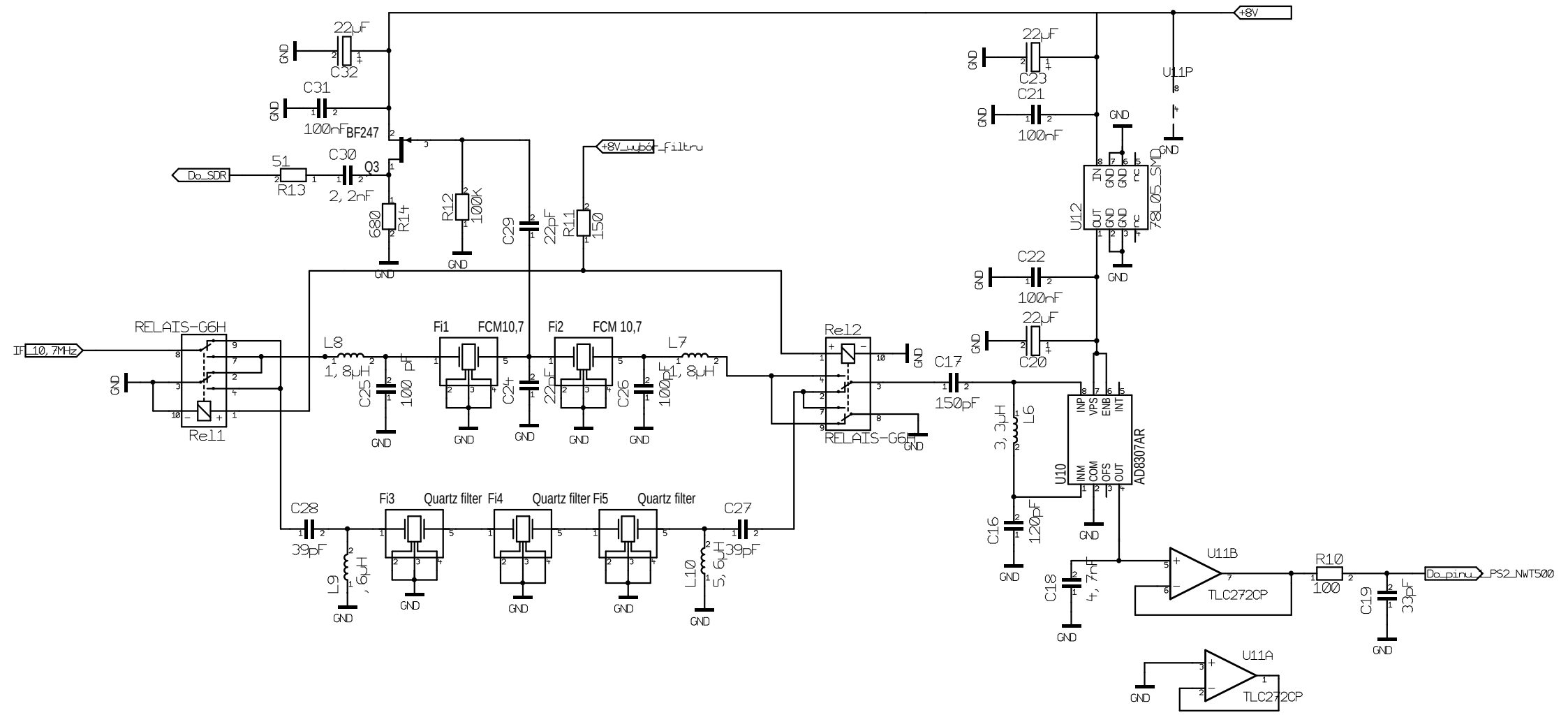
+8V
22µF
C32
C31
100nF
BF247
Q3
C30
2,2nF
51
R13
Do_SDR
680
R14
R12
100K
C29
22pF
R11
150
+8V_wybór_filtru
22µF
C23
C21
100nF
U11P
U12
78L05_SMD
C22
100nF
22µF
C20
RELAIS-G6H
Rel1
IF 10,7MHz
L8
1,8µH
C25
100 pF
Fi1
FCM10,7
C24
22pF
Fi2
FCM 10,7
C26
100pF
L7
1,8µH
Rel2
RELAIS-G6H
C17
150pF
3,3µH
L6
U10
AD8307AR
C16
120pF
C18
4,7nF
U11B
TLC272CP
R10
100
C19
33pF
Do_pinu
PS2_NWT500
U11A
TLC272CP
C28
39pF
L9
,6µH
Fi3
Quartz filter
Fi4
Quartz filter
Fi5
Quartz filter
L10
5,6µH
C27
39pF
GND